Barksdale®
CONTROL PRODUCTS

High Pressure OEM Valves

Series 6140, 6180

Patent# 3,014,499

Features

- Original Shear-Seal® technology
- Low pressure drop
- Tolerates contaminates
- Spring return option
- Flexible design for OEM requirements

Applications

- Hydraulic presses
- Military equipment
- Paper mill controls
- Hydraulic pilot valves
- Railroad maintenance equipment
- Halon fill systems

General Specifications*

Working Pressure:	Hydraulic fluid up to 3000 psi (206 bar)
Flow Capacity, Cv:	See table
Back Pressure:	Must not exceed 250 psi (17.2 Bar) at return port for satisfactory operation
Pressure Drop:	14 psi (0.96 bar) at 20 ft/sec See Supplemental Guide for more detailed information
Proof Pressure:	1.5X times working pressure except at return port
Burst Pressure:	2X times working pressure except at return port (see flow chart)

Media Temperature Range:	-40° to +250°F (-40° to +121°C)
Wetted Material:	
Rotor:	Hard anodized aluminum
Pressure Seals:	Brass
Shaft:	Stainless steel
Body Housing:	Anodized aluminum
Bearings:	Carbon steel
Standard O-rings:	Buna N, others available
Back-up Rings:	PTFE

* See product configurator for additional options.

FLOW PATTERNS
(VIEWED FROM SHAFT END)

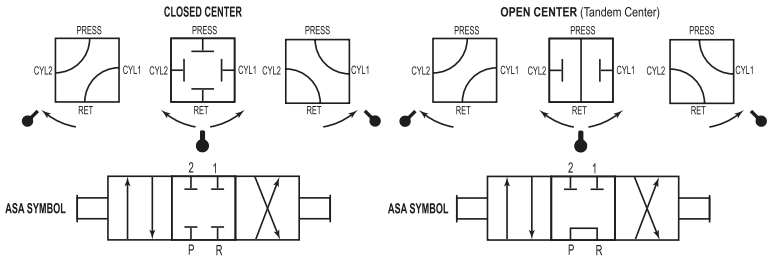

	Main Valve Port Size	Flow Capacity (Approx.) Service: Oil 20 ft/sec gpm (l/min)	40 ft/sec gpm (l/min)	60 ft/sec gpm (l/min)	Min. Flow Passage Dia.	Cv Factor	Approx. Shipping Weight lbs (kgs)	Return Port Burst Rating
	1/4″ & 3/8″	5 (19)	10 (38)	Use Heavy Duty Valve	5/16″	1.56	1.7 (0.8)	3,000 psi (207 bar)
	1/2″ & 3/4″	14 (53)	28 (106)		17/32″	4.80	3.8 (1.7)	
**	1″	25 (95)	51 (190)		23/32″	9.20	7.6 (3.5)	2,000 psi (138 bar)

** 6140 Series only

3211 Fruitland Avenue • Los Angeles, CA 90058 • 800-835-1060 • Fax: 323-589-3463 • www.barksdale.com

See Barksdale's Standard Conditions of Sale • Specifications are subject to modification at any time • Bulletin #B0054-F • 04/25 • ©2026 • Printed in the U.S.A.

Technical Drawings

6140 Series

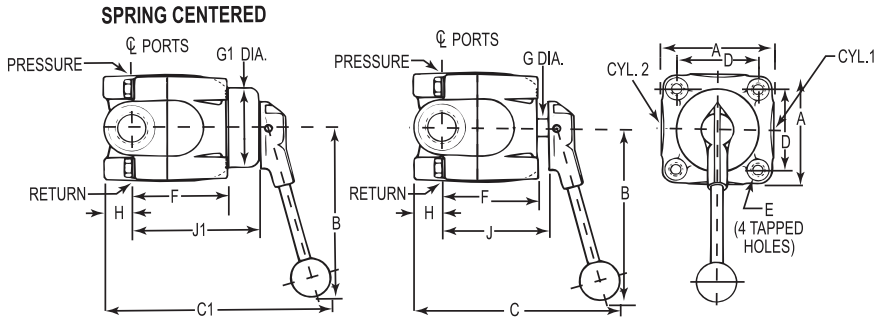

6180 Series

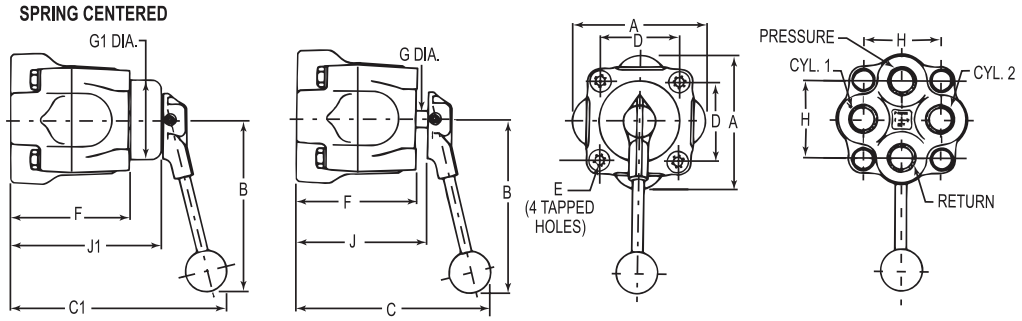

6140 Series In-Line (side) Porting

Port Size NPT	A	B	C	C1	D	E	F	G Dia.	G1 Dia.	H	J	J1
1/4" & 3/8"	2.63 (66.8)	5.44 (138)	6.38 (161.9)	6.718 (170.6)	1.81(46.0)	5/16 - 18 NC	2.31(58.7)	0.44 (11.2)	1.91(48.5)	0.56 (14.2	2.66 (67.6)	3.03 (77.0)
1/2" & 3/4"	3.5 (88.9)	5.44 (138)	7.37 (187)	7.93 (201)	2.56 (65.0)	3/8 - 16 NC	3.03 (77.0)	0.56 (14.2)	2.56 (65.0)	0.88 (22.4)	3.38 (85.9)	3.94 (100)
1"	4.5 (114)	8.44 (214)	8.16 (207)	9.03 (229.3)	3.31 (84.1)	1/2 - 13 NC	3.59 (91.2)	0.75 (19.1)	3.38 (86)	1.06 (26.9)	3.94 (100)	4.81 (122)

6180 Series Straight (bottom) Porting

Port Size NPT	A	B	C	C1	D	E	F	G Dia.	G1 Dia.	H	J	J1
1/4" & 3/8"	2.63 (66.8)	5.44 (138)	6.13 (156)	6.50 (165)	1.81(46.0)	5/16 - 18 NC	2.66 (67.6)	0.44 (11.2)	1.91(48.5)	1.50 (38.1)	3.00 (76.2)	3.38 (85.9)
1/2" & 3/4"	4.19 (106)	5.44 (138)	7.34 (186)	7.91 (201)	2.56 (65.0)	3/8 - 16 NC	3.88 (98.6)	0.56 (14.2)	2.56 (65.0)	2.50 (65.5)	4.22 (107)	4.78 (121)

Dimensions in inches (mm)

Product Configurator

Example:	614	2	R	3	H	C	3		

Series

614	Regular (side) porting
618	Straight (bottom) porting

Port Size

1	1/4" NPT ports
2	3/8" NPT ports
3	1/2" NPT ports
4	3/4" NPT ports
5	1" NPT ports (614 only)

Style

R	Regular (side) porting (series 614)
S	Straight (bottom) porting (series 618)

Pressure

3	3,000 psi

Working Media

H	Hydraulic oil

Flow Pattern

C	Closed center
O	Open center (tandem center)

Position

3	3-position

Options

	See Supplemental Guide for complete list

Options

-MC[1]	Spring centering

1. For 1" ported pressure rating 2,000 psi Not available on 1-1/2" ported valves.

3211 Fruitland Avenue • Los Angeles, CA 90058 • 800-835-1060 • Fax: 323-589-3463 • www.barksdale.com

See Barksdale's Standard Conditions of Sale • Specifications are subject to modification at any time • Bulletin #B0054-F • 04/25 • ©2026 • Printed in the U.S.A.