Explosion Proof Compact Switch

Series 9681X, 9692X

Features

- IECEx & ATEX approved
- NEMA 4X, 7 & 9
- NACE compliant
- SPDT and DPDT switch
- Safe to adjust during operation
- Dia-seal/piston sensor
- Hazardous location dual seal approved for Canada

Applications

- BOP closing units
- Safety panels
- Pipelines
- Chemical and petrochemical plants
- Pulp and paper mills
- Pump and gas compressors
- Turbines
- Oil & gas applications

General Specifications*

Accuracy:	±2% of full scale
Typical Life:	2.5 million cycles
Switch:	SPDT, snap action, simulated DPDT (optional)
Wetted Parts: Process Fitting: Seals: Piston: Enclosure:	 316 stainless steel Viton® Diaphragm (9681X) Viton® O-ring and Teflon® backup ring (9692X) Stainless steel (on 9692X) 316 stainless steel or aluminum
Electrical Connection:	1/2" NPT male conduit connection, 18 AWG, 18" (300 mm) free leads
Electrical Rating:	11 amps @ 125/250VAC 5 amps @ 30 VDC (CC Class)
Enclosure Ratings:	NEMA 4X, 7 & 9 (SS) NEMA 4, 7, & 9 (AL)

* See product configurator for additional options.

Pressure Connection:	1/4" NPT female (standard) See configurator for more options
Approvals: ATEX/IECEx UL # E37043 CSA # LR22354	 CE 0081, LCIE 08 ATEX 6074X Ex II 2 G, Ex d IIC T6 Gb IECEx LCIE 17.0001X UL&CSA Approved for use in hazardous locations Class I, Groups A,B,C,& D; Class II, Groups E,F,& G (Group A, UL Only)
Ambient Temperature: LT Option: (not UL or CSA)	-4° to +104°F (-20° to +40°C) -40° F to 149° F (-40°C to +65°C) (Consult factory)
EMI/RFI:	EN55011
Vibration:	10g's 10-500 Hz, MIL-STD-202F
Shock:	50g's, 11 mS, MIL-S-901C
Adjustment:	Internal adjustment wheel with built in locking set-screws (#6)[1]
Shipping Weight:	Approximately 1.85 lbs.

[1] Need to loosen set screw (#6) at all times when resetting adjustment.

Wiring Code

	9692X/9681X (Pressure)	
Lead	Circuit #1	Circuit #2
Normally Open	Red	Yellow
Common	Purple	Brown
Normally Closed	Blue	Orange
Ground	Green	

Wiring Diagram (9681X/9692X models)

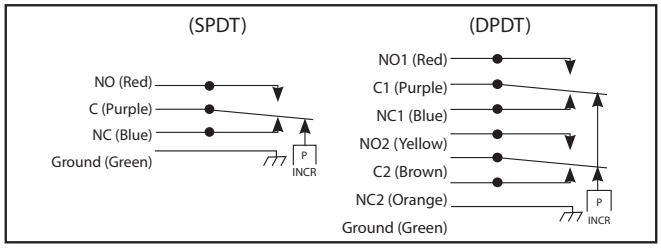

3211 Fruitland Avenue • Los Angeles, CA 90058 • 800-835-1060 • Fax: 323-589-3463 • www.barksdale.com

See Barksdale's Standard Conditions of Sale • Specifications are subject to modification at any time • Bulletin #S0049-O • 3/26 • ©2026 • Printed in the U.S.A.

Technical Drawings

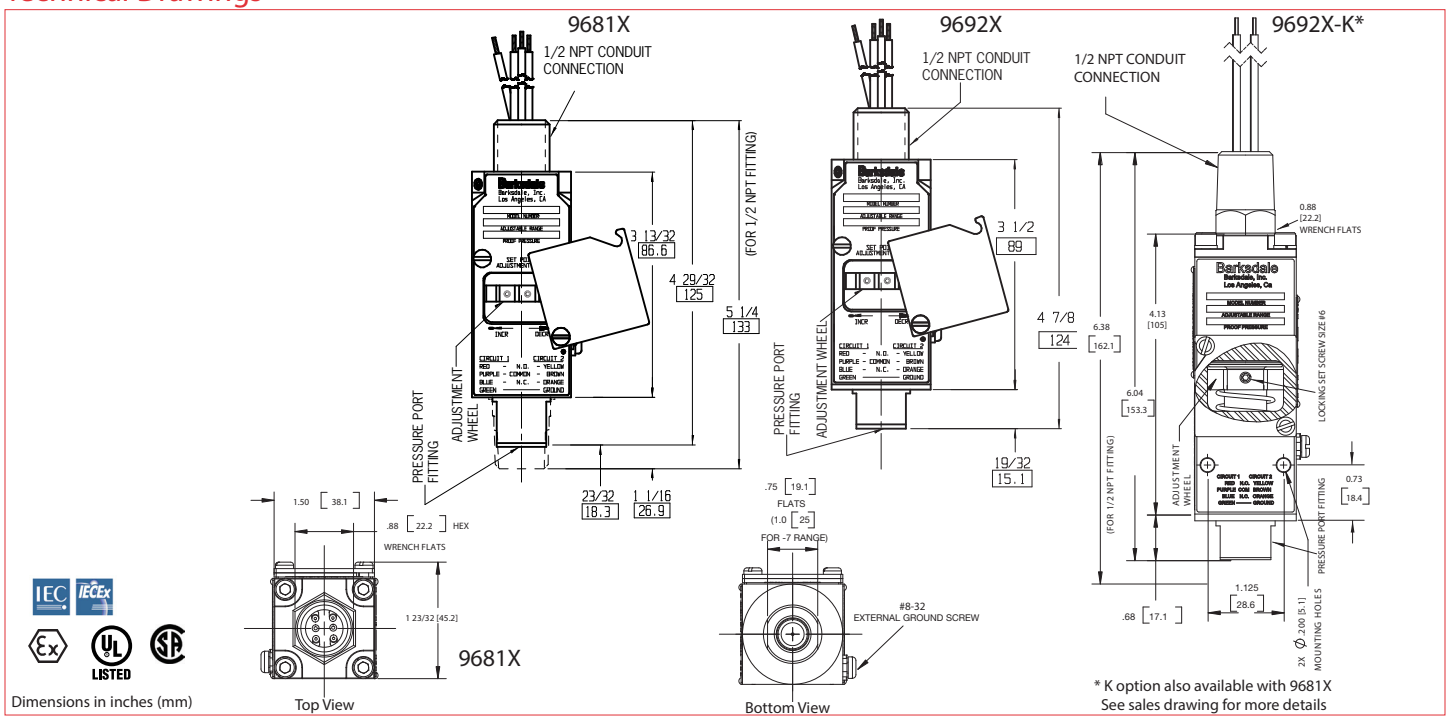

* K option also available with 9681X
See sales drawing for more details

Product Configurator

Example:	A	9681X	-1CC	-2			-AL	-K	-W036

Approvals

Blank	All approvals (ATEX & IECEx, UL & CSA)
A[1]	ATEX & IECEx only

Base Model

9681X	Pressure switch, 2 - 500 psi
9692X	Pressure switch, 100 - 10000 psi

Limit Switch

-1CC	SPDT Switch, 11 amps @ 125/250 VAC; 5 amps @ 30 VDC
-2CC	DPDT Switch, 11 amps @ 125/250 VAC; 5 amps @ 30 VDC
-1GH	SPDT gold contact switch, 1 amp @ 125 VAC
-2GH	DPDT gold contact switch, 1 amp @ 125 VAC

Pressure Ranges for 9681X

		Adjustable Range				Approx. Deadband	Proof
		Decreasing - psi (bar)		Increasing - psi (bar)		(Actuation Value)	Pressure
		Min	Max	Min	Max	psi-(bar)	psi (bar)
9681X	-1	2 (.1)	12 (.8)	3 (.2)	15 (1)	1 - 3 (.07 - .2)	1000 (69)
	-2	5 (.3)	125 (8.6)	7 (.5)	150 (10.3)	2 - 25 (.1 - 1.7)	1000 (69)
	-3	25 (1.7)	260 (17.9)	32 (2.2)	300 (20.6)	7 - 40 (.5 - 2.8)	1000 (69)
	-4	50 (3.4)	440 (30.3)	65 (4.5)	500 (34.4)	15 - 60 (1 - 4.1)	1000 (69)

Pressure Range for 9692X

9692X	Adjustable Range				Approx. Deadband	Proof
	Decreasing - psi (bar)		Increasing - psi (bar)		(Actuation Value)	Pressure
	Min	Max	Min	Max	psi-(bar)	psi (bar)
-1	100 (6.9)	600 (41.4)	150 (10.3)	750 (51.7)	50 - 150 (3.4 - 10.3)	15000 (1034)
-2	150 (10.3)	800 (55.2)	220 (15.2)	1000 (69)	70 - 200 (4.7 - 13.8)	15000 (1034)
-3	400 (27.6)	2600 (179)	500 (34.5)	3000 (207)	100 - 600 (6.7 - 41.4)	15000 (1034)
-4	700 (48.2)	4400 (303)	840 (57.9)	5000 (345)	140-600 (9.6 - 41.4)	15000 (1034)
-5	1000 (69)	6700 (462)	1200 (82.8)	7500 (517)	140-800 (9.6 - 55.2)	15000 (1034)
-6	150 (10.3)	800 (55.2)	220 (15.2)	3000 (207)	50-1000 (3.4-68.9)	15000 (1034)
-7	5000 (344.8)	8800 (606.9)	5200 (358.6)	10000 (689.7)	200-2000 (13.8-137.9)	15000 (1034)

Wetted Material

Blank	Viton® diaphragm/O-rings (standard)
Blank[1]	For -LT Option (consult factory)
-B	Buna-N diaphragm/O-rings
-E	EPR diaphragm/O-rings (UL and ATEX not available with this option; CSA only available on the 9692X models)

Options

-Wxxx	Extra wire length (XXX = inches)
-Sxxx	Factory preset (consult factory)
-T	Wire lock feature for adjustment cover screws
-LT[1]	Low temp: -40°F to 149°F [Must select option 'A'] Consult factory
-K	Mounting holes and conduit wrench flats

Housing Option

Blank	316 stainless steel housing
-AL	Aluminum housing (-K only)

Process Connection

Blank	1/4" NPT female (standard)
-P1	7/16-20 SAE female process connection
-P3	1/2" NPT female process connection
-P4	1/2" NPT male process connection

NOTES:
1 For -LT, Low temperature option, 'A' option in approvals must be selected. Not UL or CSA approved.
Consult factory for lead-time and availability.
2 Deadband values indicated when used with the "CC" limit switch.
3 Contact factory for other possible connection options.

3211 Fruitland Avenue • Los Angeles, CA 90058 • 800-835-1060 • Fax: 323-589-3463 • www.barksdale.com

See Barksdale's Standard Conditions of Sale • Specifications are subject to modification at any time • Bulletin #S0049-O • 3/26 • ©2026 • Printed in the U.S.A.